Data sheet

# WL4S-3F3130S04

W4

PHOTOELECTRIC SENSORS

SICK
Sensor Intelligence.

Illustration may differ

## Ordering information

| Type | part no. |
|---|---|
| WL4S-3F3130S04 | 1056053 |

Other models and accessories ➜ www.sick.com/W4

## Detailed technical data

### Features

| | |
|---|---|
| **Functional principle** | Photoelectric retro-reflective sensor |
| **Functional principle detail** | Without reflector minimum distance (autocollimation/coaxial optics) |
| **Sensing range max.** | 0 m ... 4 m [1] |
| **Sensing range** | 0 m ... 2.5 m [1] |
| **Polarisation filters** | Yes |
| **Emitted beam** | |
| Light source | PinPoint LED [2] |
| Type of light | Visible red light |
| Light spot size (distance) | Ø 45 mm (1.5 m) |
| **Key LED figures** | |
| Wave length | 650 nm |
| **Adjustment** | None |

[1] Reflector PL80A.
[2] Average service life: 100,000 h at $T_U$ = +25 °C.

## Electronics

| | |
|---|---|
| **Supply voltage $U_B$** | 10 V DC ... 30 V DC [1] |
| **Ripple** | < 5 $V_{pp}$ [2] |
| **Current consumption** | 20 mA [3] |
| **Protection class** | III |
| **Digital output** | |
| Type | PNP |
| Switching mode | Dark switching |
| Output current $I_{max.}$ | ≤ 100 mA |
| Response time | < 0.5 ms [4] |
| Switching frequency | 1,000 Hz [5] |
| **Circuit protection** | A [6]<br>C [7]<br>D [8] |

[1] Limit values.
[2] May not fall below or exceed $U_V$ tolerances.
[3] Without load.
[4] Signal transit time with resistive load.
[5] With light/dark ratio 1:1.
[6] A = $V_S$ connections reverse-polarity protected.
[7] C = interference suppression.
[8] D = outputs overcurrent and short-circuit protected.

## Mechanics

| | |
|---|---|
| **Housing** | Rectangular |
| **Design detail** | Slim |
| **Dimensions (W x H x D)** | 12.2 mm x 41.8 mm x 17.3 mm |
| **Connection** | Cable with connector M8, 3-pin [1] |
| **Connection detail** | |
| Conductor size | 0.14 mm² |
| Cable diameter | Ø 3.4 mm |
| Length of cable (L) | 300 mm [1] |
| **Material** | |
| Housing | Plastic, ABS |
| Front screen | Plastic, PMMA |
| Cable | Plastic, PVC |
| **Weight** | 30 g |

[1] Do not bend below 0 °C.

## Ambient data

| | |
|---|---|
| **Enclosure rating** | IP67<br>IP66 |
| **Ambient operating temperature** | –40 °C ... +60 °C |
| **Ambient temperature, storage** | –40 °C ... +75 °C |
| **UL File No.** | NRKH.E181493 & NRKH7.E181493 |

## Certificates

| | |
|---|---|
| **EU declaration of conformity** | ✓ |
| **UK declaration of conformity** | ✓ |
| **ACMA declaration of conformity** | ✓ |
| **Moroccan declaration of conformity** | ✓ |
| **China RoHS** | ✓ |
| **ECOLAB certificate** | ✓ |
| **Photobiological safety (DIN EN 62471) certificate** | ✓ |

## Classifications

| | |
|---|---|
| **ECLASS 5.0** | 27270902 |
| **ECLASS 5.1.4** | 27270902 |
| **ECLASS 6.0** | 27270902 |
| **ECLASS 6.2** | 27270902 |
| **ECLASS 7.0** | 27270902 |
| **ECLASS 8.0** | 27270902 |
| **ECLASS 8.1** | 27270902 |
| **ECLASS 9.0** | 27270902 |
| **ECLASS 10.0** | 27270902 |
| **ECLASS 11.0** | 27270902 |
| **ECLASS 12.0** | 27270902 |
| **ETIM 5.0** | EC002717 |
| **ETIM 6.0** | EC002717 |
| **ETIM 7.0** | EC002717 |
| **ETIM 8.0** | EC002717 |
| **UNSPSC 16.0901** | 39121528 |

## Connection type

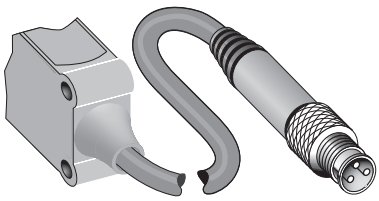

## Connection diagram Cd-045

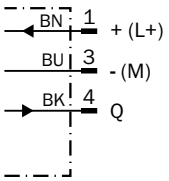


## Characteristic curve WL4S-3

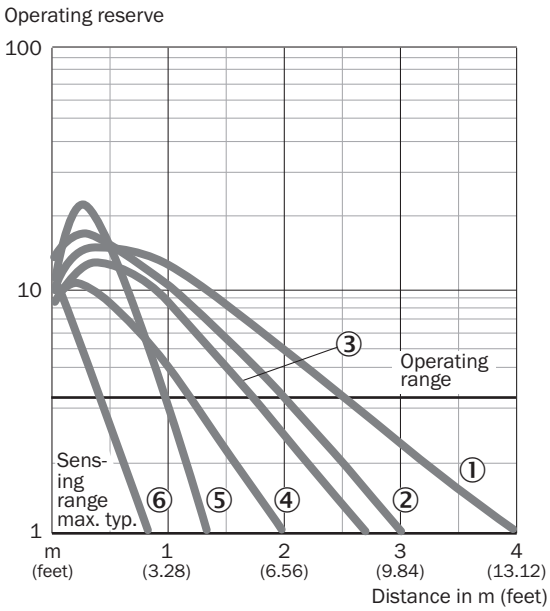


① Reflector PL80A
② Reflector P250F
③ Reflector PL40A
④ Reflector PL20F
⑤ PL10F reflector
⑥ Reflective tape REF-IRF-56

## Light spot size

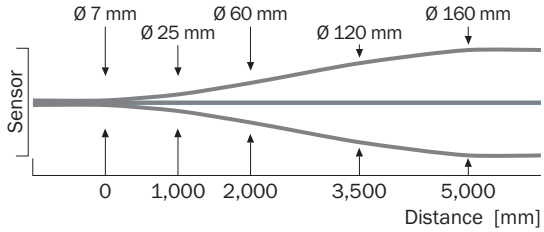

## Sensing range diagram WL4S-3, WLG4S-3, 4 m

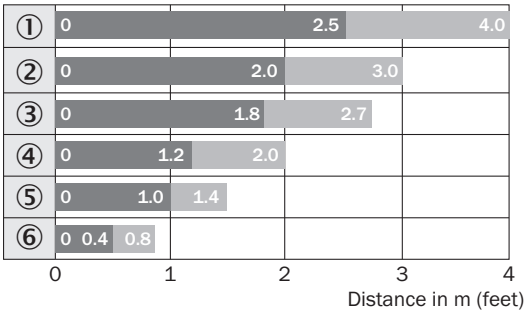


Sensing range  Sensing range max.

① Reflector PL80A
② Reflector P250F
③ Reflector PL40A
④ Reflector PL20F
⑤ PL10F reflector
⑥ Reflective tape REF-IRF-56

## Dimensional drawing WL4S-3, WSE4S-3, potentiometer

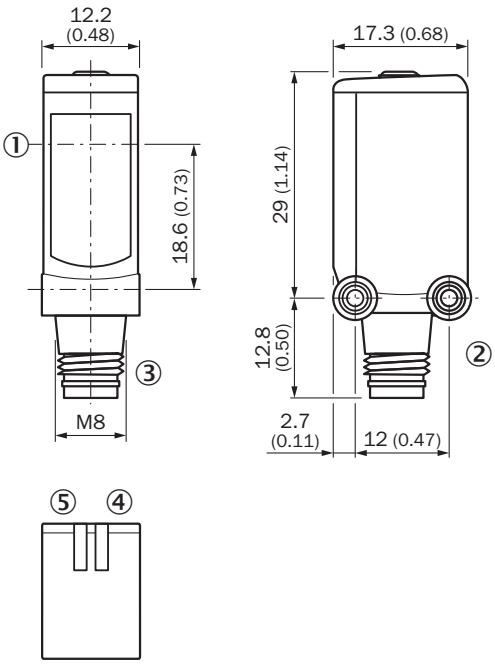


Dimensions in mm (inch)
① Center of optical axis
② Threaded mounting hole M3
③ Connection
④ LED indicator green: Supply voltage active
⑤ LED indicator yellow: Status of received light beam

## Recommended accessories

Other models and accessories ➜ www.sick.com/W4

| | Brief description | Type | part no. |
|---|---|---|---|
| Mounting systems | | | |
| | • **Description:** Mounting bracket for wall mounting<br>• **Material:** Stainless steel<br>• **Details:** Stainless steel 1.4571<br>• **Items supplied:** Mounting hardware included<br>• **Suitable for:** W4S, W4F, W4S | BEF-W4-A | 2051628 |
| | • **Description:** Plate N08 for universal clamp bracket<br>• **Material:** Steel, zinc diecast<br>• **Details:** Zinc plated steel (sheet), Zinc die cast (clamping bracket)<br>• **Items supplied:** Universal clamp (5322626), mounting hardware<br>• **Usable for:** W100, W150, W4S, W4F, W8, W9-3, W8G, W8 Laser, W8 Inox, G6, W100 Laser, W100-2, W10, G6 Inox, RAY10, W4SLG-3, W9, GR18, MultiPulse, Reflex Array, MultiLine, LUT3, KT5, KT8, KT10, CS8 | BEF-KHS-N08 | 2051607 |
| | • **Description:** Plate N11N for universal clamp bracket<br>• **Material:** Stainless steel<br>• **Details:** Stainless steel 1.4571 (sheet), Stainless steel 1.4408 (clamp)<br>• **Items supplied:** Universal clamp (5322627), mounting hardware<br>• **Usable for:** DeltaPac, Glare, WTD20E | BEF-KHS-N11N | 2071081 |
| reflectors and optics | | | |
| | • **Description:** Fine triple reflector, screw connection, suitable for laser sensors<br>• **Dimensions:** 20 mm 32 mm<br>• **Ambient operating temperature:** –30 °C ... +65 °C | PL10F | 5311210 |
| connectors and cables | | | |
| | • **Connection type head A:** Male connector, M8, 3-pin, straight, A-coded<br>• **Description:** Unshielded<br>• **Connection systems:** Screw-type terminals<br>• **Permitted cross-section:** 0.14 mm² ... 0.5 mm² | STE-0803-G | 6037322 |
| | • **Connection type head A:** Female connector, M8, 3-pin, straight, A-coded<br>• **Connection type head B:** Flying leads<br>• **Signal type:** Sensor/actuator cable<br>• **Cable:** 5 m, 3-wire, PVC<br>• **Description:** Sensor/actuator cable, unshielded<br>• **Application:** Zones with chemicals, Uncontaminated zones | YF8U13-050VA1XLEAX | 2095884 |
| | • **Connection type head A:** Female connector, M8, 3-pin, straight, A-coded<br>• **Connection type head B:** Flying leads<br>• **Signal type:** Sensor/actuator cable<br>• **Cable:** 5 m, 3-wire, PUR, halogen-free<br>• **Description:** Sensor/actuator cable, unshielded<br>• **Application:** Uncontaminated zones, Zones with oils and lubricants, Robot, Drag chain operation | YF8U13-050UA1XLEAX | 2094788 |

# SICK AT A GLANCE

SICK is one of the leading manufacturers of intelligent sensors and sensor solutions for industrial applications. A unique range of products and services creates the perfect basis for controlling processes securely and efficiently, protecting individuals from accidents and preventing damage to the environment.

We have extensive experience in a wide range of industries and understand their processes and requirements. With intelligent sensors, we can deliver exactly what our customers need. In application centers in Europe, Asia and North America, system solutions are tested and optimized in accordance with customer specifications. All this makes us a reliable supplier and development partner.

Comprehensive services complete our offering: SICK LifeTime Services provide support throughout the machine life cycle and ensure safety and productivity.

**For us, that is "Sensor Intelligence."**

# WORLDWIDE PRESENCE:

Contacts and other locations –www.sick.com



SICK
Sensor Intelligence.